Technical guidebook

User guide

Assembling

Maintenance

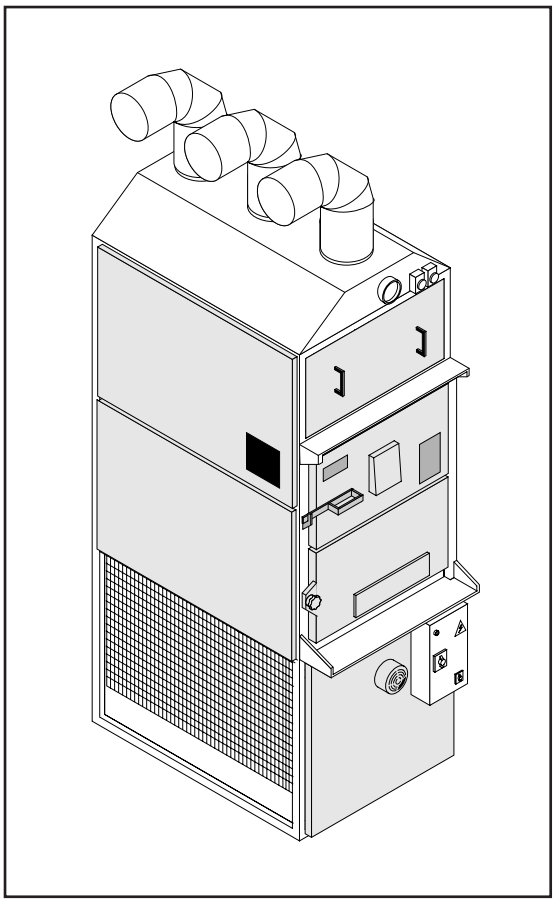

WARM AIR GENERATOR

MOD. F85
MOD. F120
MOD. F240

YEAR OF MANUFACTURING

SERIAL NUMBER

Text Version
05-14

FABBRI TERMOMECCANICA S.r.l.
Via Cangiotti, 10
61122 PESARO (PU)
Tel.0721/282537 Fax 0721/282970
www.fabbritermomeccanica.it
e-mail: info@fabbritermomeccanica.it

LEGEND

This symbol indicates danger, and will be used every time the operator's safety is involved.

This symbol indicates caution and is used to draw attention on very important operations needed for the proper and long-lasting use of the.

This symbol represents an environmental note, and draws attention on rules to follow for the environment's preservation.

Dear Customer,

Before using the machine, it is important to read this handbook.
In order to ensure the operator's safety, the machine's devices must be kept in constant efficiency.
This booklet shows how to use and maintain the machine, and it is the operator's duty and responsibility to follow the present instructions.

WARNING! The following instructions are meant for your safety.
Keep this booklet with care, for other operator's easy use.
The installation must be performed according to the manufacturer's instructions by trained personnel.
This machine must only be used for the purpose it has been built. Any other use is to be considered dangerous.
The machine must be used only by specifically trained personnel.
For any repair operations, always refer to a manufacturer-authorized assistance centre, and ask for original spare parts.
Disregarding any of the above might compromise the machine's safety.

MODEL _____

SERIAL NUMBER _____

YEAR OF MANUFACTURING _____

FABBRI TERMOMECCANICA S.r.l.
Via Cangiotti, 10
61122 PESARO
Tel.0721/282537 Fax 0721/282970
www.fabbritermomeccanica.it
e-mail: info@fabbritermomeccanica.it

INDEX

1 TECHNICAL SPECIFICATIONS 5
1.1 MACHINE DESCRIPTION 5
1.2 APPLIED RUGULATIONS 5
1.3 WORK STATION 6
1.4 PROTECTIONS 6
1.5 MODELS 7
1.6 IDENTIFICATION 7
1.7 ENCUMBRANCE 8
1.8 LABELLING 8
1.9 TECHNICAL SPECIFICATIONS 9

2 INSTALLATION 10
2.1 TRANSPORT 11
2.2 LIFTING AND HANDLING 11
2.3 ENVIRONMENTAL SPECIFICATIONS 12
2.4 INSTALLATION 12
2.5 MAINTENANCE SPACE 14
2.6 ELECTRIC PLUG-IN 14

3 OPERATION 16
3.1 PRELIMINARY CONTROLS 16
3.1.2 CONTROLS DESCRIPTION 16
3.2 STARTUP 17
3.2.1 STARTUP (summer) 17
3.3 OPERATION 18
3.4 REGULAR STOP 18

4 ORDINARY MAINTENANCE 19
4.1 PRELIMINARY CONTROLS 19
4.2 CLEANING THE WARM AIR GENERATOR 19
4.2.1 WIPING OFF THE ASH 20
4.2.2 CLEANING THE FLUE 20
4.2.3 CLEANING THE HEAT EXCHANGER 20
4.3 FANBELT STRETCHING 20
4.4 REPLACING THE THERMOSTAT PROBE 21
4.5 REPLACING THE FUSE 21

5 END OF SERVICE 22

6 ACOUSTIC POLLUTION 22

7 SPARE PARTS CATALOGUE 23
TAV. 1 SPARE PARTS F85 24
TAV. 2 SPARE PARTS F120-240 25
TAV. 3 ELECTRIC PLAN F85-1SV 26
TAV. 4 ELECTRIC PLAN F85-2SV 27
TAV. 5 ELECTRIC PLAN F85-1CV 28
TAV. 6 ELECTRIC PLAN F85-2CV 29
TAV. 7 ELECTRIC PLAN F120-1 30
TAV. 8 ELECTRIC PLAN F120-2 31
TAV. 9 ELECTRIC PLAN F240-1 32
TAV. 10 ELECTRIC PLAN F240-2 33

1 TECNICAL SPECIFICATIONS

1.1 MACHINE DESCRIPTION

This machine is a warm air generator which operates with solid fuel.
The framework is made up of a square profiled steel chassis and panels in galvanized polished steel.
On the chassis' lower part are located the vents for the air to be heated, which push the air inside the heat exchanger. The air is then expelled by exhaustion vents on the upper part of the machine.
The combustion chamber is chrome INOX steel, reinforced with ribs, and it is placed above the vents.
Inside, the furnace is separated from the cinerary by a steel grid.
The loading doors on the back of the machine are steel and internally coated in refractory materials. On the lower door you will find the shutter for regulating the combustion chamber's power.
The upper door, with a handle, is used to load fuel in the machine.
The fumes' exhaust pipe in the combustion chamber is linked to the heat exchanger above it.
The heat exchanger is made up of a series of pipes that run down the back and are linked to the draft mechanism, which is in turn operated by an external engine (except in the F85SV model).
On the control panel you will find the switches to start up the draft engine and the air heating vents.

1.2 APPLIED REGULATIONS

Summary of laws and harmonized and technical rules

1. Directive 2006/42/CE (Directive regarding Machines).

EN 292/1 Machine safety – fundamentals, general design principles – terminology, basic methodology.

EN 292/2 Machine safety – fundamentals, general design principles – technical specifications and principles.

EN 294 Machine safety – safety distance to avoid upper arms to make contact with dangerous parts - 1992.

EN 563	Machine safety – contact surface temperature. Ergonomic data to establish temperature values limits for heated surfaces. (june 1994).
UNI 8364	Heating systems – checkup and maintenance.
2.	Directive 06/95/CE (Directive regarding low tension).
EN 60204-1	Machine safety – electric equipment Part 1 general requirements. - 1992 (revision of EN 60204-1).
EN 60529	Casing protection degrees (june 1991)
EN 60445	identification of terminals and drawn conductors, and rules for the alphanumeric
3.	Directive 04/108/CE (Directive regarding EMC - electromagnetic compatibility).
EN 50081-2	electromagnetic compatibility – generic emission rule. Part 2: industrial environment
EN 50082-2	electromagnetic compatibility – generic immunity rule. Part 2: industrial environment.

1.3 WORK STATION

The machine need not be manned, therefore there is no need for an operator to use it, just to periodically reload fuel.
The operator's presence is required only when combustion is started.

1.4 PROTECTIONS

The machine is equipped with the following safety systems (Fig.1):
- Protection of the power grid with doorlock (pos.A).
- Mechanical protection in the loading area, coated in refractory materials (pos.B).
- Permanent mechanical protection using a galvanized steel sheet on the machine's sides (pos.C).
- Mechanical protection using a metal grid in the vents' suction tract (pos.D).
- Mechanical protection using a steel sheet reinforced with refractory materials in the heat exchanger's inspection tract (pos.E).
- Alarm (pos.F) (models F240-120 and F85SV only).

Furthermore, for the operator's safety we recommend:
- Protective suits
- Shockproof shoes
- Protective gloves

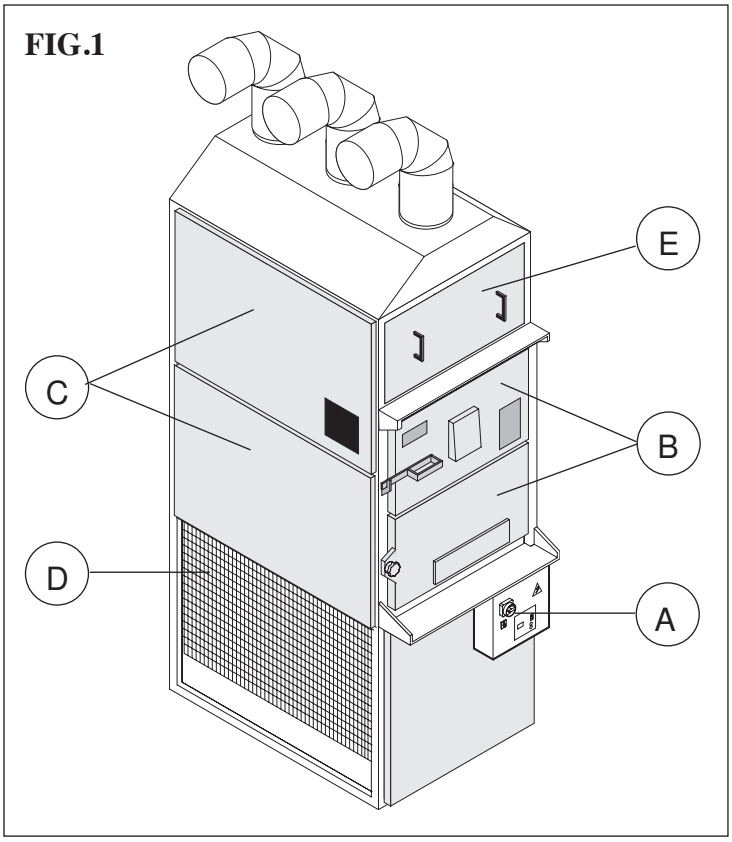

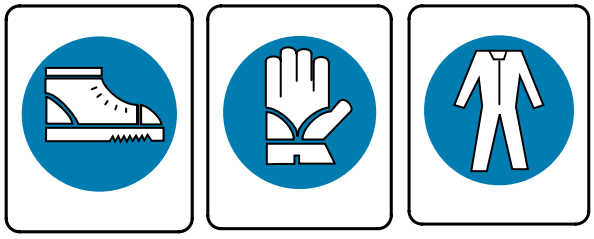

1.5 MODELS

FIG.2

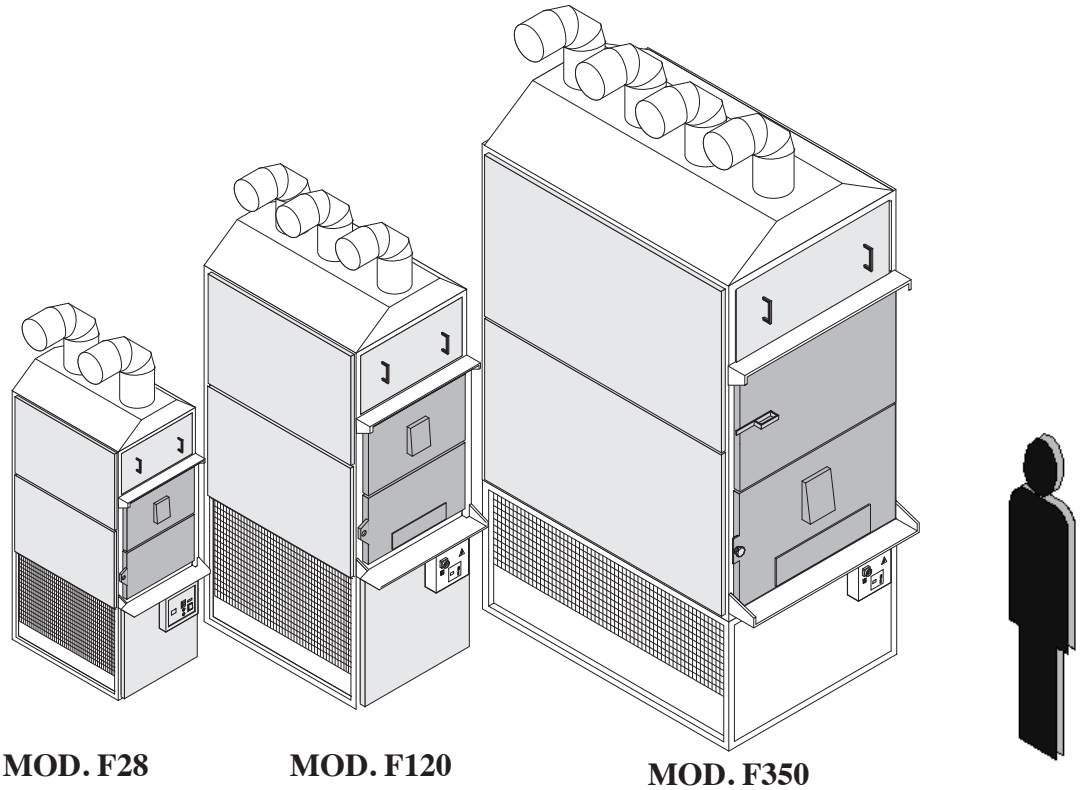

MOD. F28
MOD. F55 S.V.
MOD. F55 C.V.
MOD. F85 S.V.
MOD. F85 C.V.

MOD. F120
MOD. F240

MOD. F350

1.6 IDENTIFICATION

When contacting the manufacturer, always provide the machine's serial number and year of manufacturing, found on the plate affixed on the right hand side (see fig.3).

FIG.3

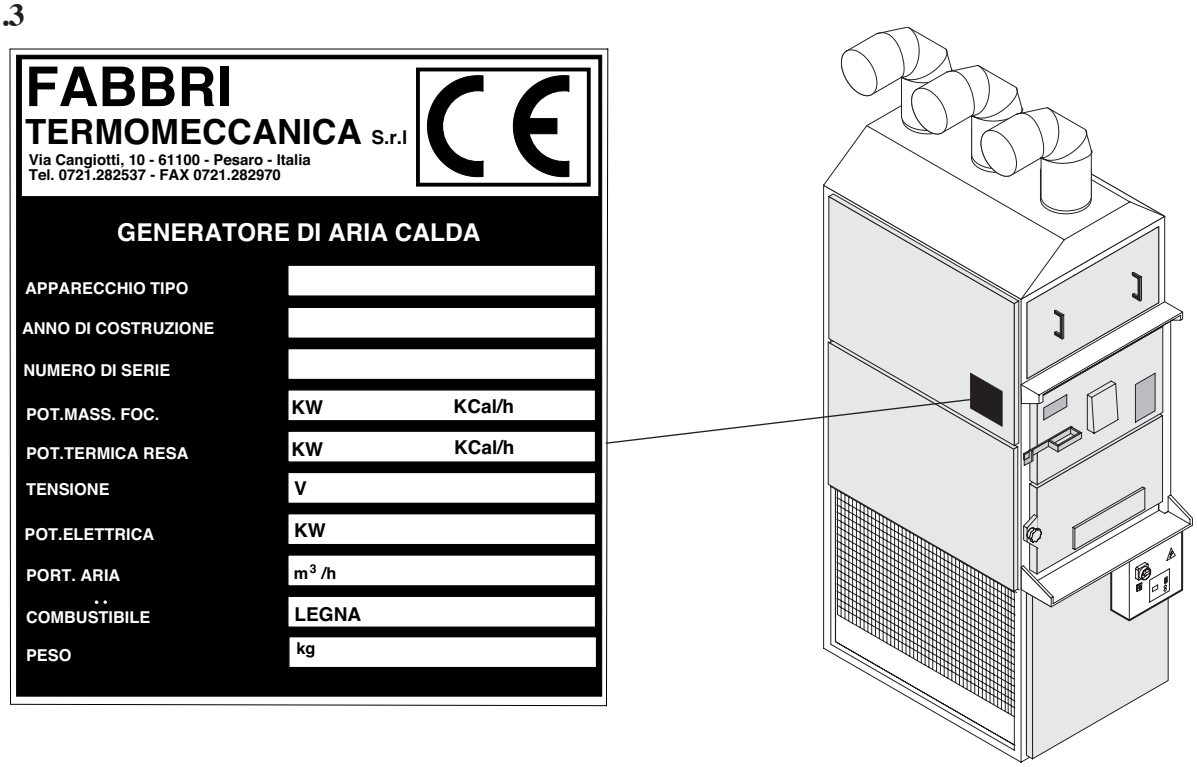

1.6 IDENTIFICATION

FIG.4

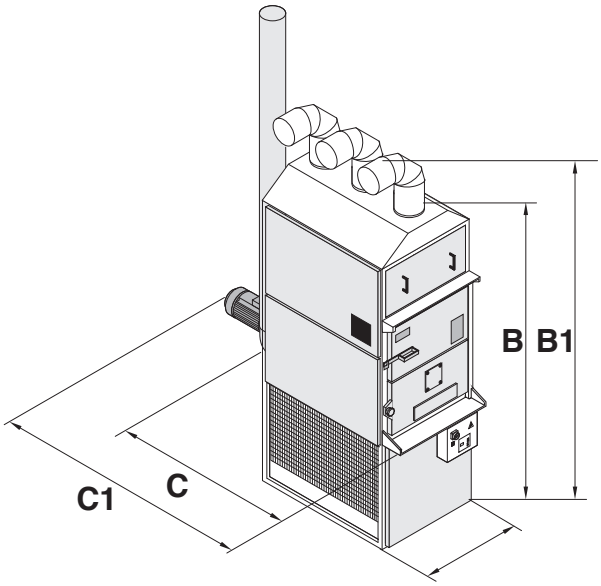

MODELS	F28	F55 S.V.	F55 C.V.	F85 S.V.	F85 C.V.	F120	F240	F350
A (mm)	560	690	690	800	820	930	1100	1220
B (mm)	1560	1750	1750	1980	1980	2200	2500	3000
B1 (mm)	1900	2100	2100	2400	2400	2600	3000	3400
C (mm)	920	1150	1150	1280	1280	1700	1900	2700
C1 (mm)	920	1150	1520	1280	1690	2060	2290	3160
WEIGHT (kg)	170	260	305	365	415	615	850	1575

1.8 LABELLING

The machine features warning labels in the indicated areas (fig.5).

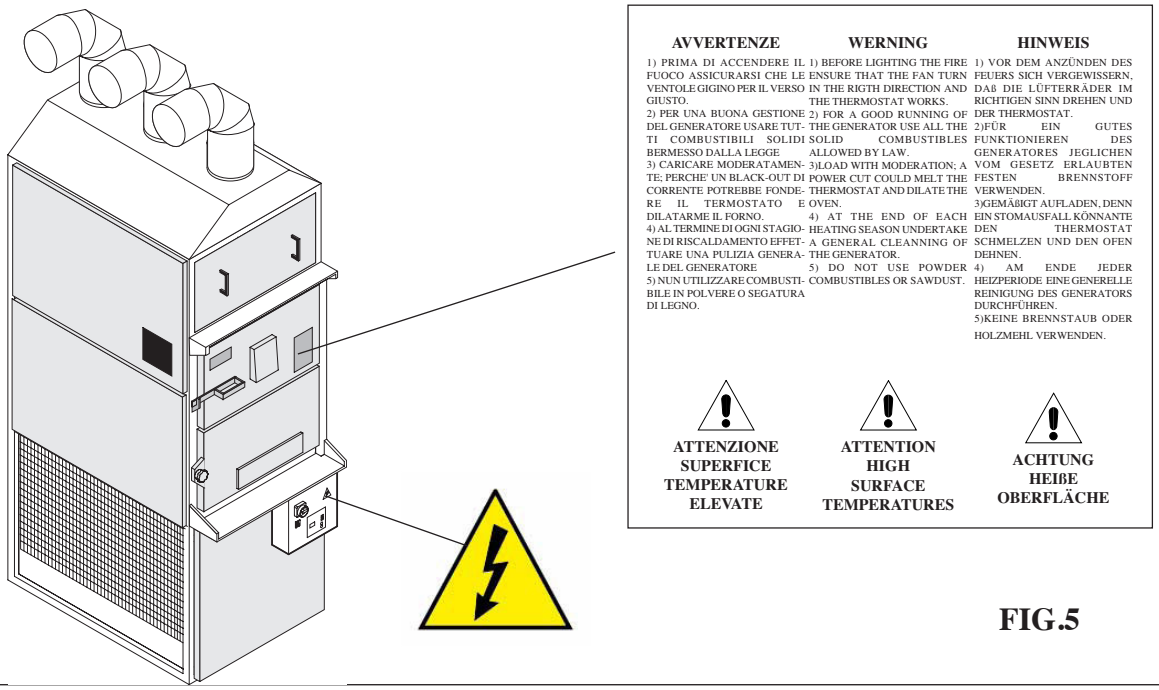

FIG.5

1.9 TECHNICAL SPECIFICATIONS

MODELS / DATA		F28	F55	F85	F120	F240	F350
Fuel		**WOOD - CHIPPINGS – TURF**					
Furnace power	(Kcal/h)	29900	69000	99500	150000	292000	425000
	(KW)	34	80	115	175	340	495
Effective conventional power	(Kcal/h)	25000	55000	80000	120000	220000	335000
	(KW)	29	64	93	140	255	390
Air intake (m^3 /h)		2200	3500	6300	8900	17800	26000
Fuel consumption (Kg/h)		13	20	30	43	85	125
Vents electric power (HP)		0,35	0,35	1,5	3	4	6
Suction vents electric power (HP)		-	0,35	0,35	0,75	0,75	1,5
Engine voltage (V)		220 (monoph.)	220 (monoph.)	380 (triph.)	380 (triph.)	380 (triph.)	380 (triph.)
Chimney diameter (mm) (models without fumes vent)		160 Ø	180 Ø	180 Ø	--------	--------	--------
Chimney diameter (mm) (models with fumes vent)		--------	180 Ø	180 Ø	200 Ø	200 Ø	250 Ø
Exhaust pipes diameter (mm)		2x180Ø	2x200Ø	2x250Ø	3x250Ø	3x300Ø	4x350Ø

2 INSTALLATION

WARNING!
The generator's installation must be performed in observation of the current laws and technical rules, and its design must be performed by a freelance professional with regular profession registration

HEATING SYSTEM DESIGN AND INSTALLATION

Law n. 46, 5th May 1990.
"Rules for systems safety".

Law n.10, 9th January 1991.
"Rules for enforcing the national energetic plan regarding energy rationing, energy saving, and development of renewable energy sources".

Presidential Decree n. 447, 6th December 199.
"Rules for applying the Law n. 46, 5th May 1990, regarding systems safety."

Presidential Decree n.412, 26th August 1993
"Rules for designing, installing, operating and maintaining heating systems in buildings towards the lowering of consumptions in respect of art. 4, paragraph 4 of the Law n.10, 9th January 1991."

RULES FOR PREVENTING POLLUTION DURING HEATING SYSTEM INSTALLATION.

Law n. 615, 13th July 1966.
"Rules against pollution".

Presidential Decree n. 1391, 22nd December 1970.
"Rules for applying Law n. 615, 13th July 1966 with rules to prevent pollution, regarding heating systems".

RULES FOR PREVENTING FIRES DURING HEATING SYSTEM INSTALLATION.

Minister of Internal Affairs Draft n.73, 29th July 1971.
"Heating systems operating with oil fuel or oil gas – Rules against pollution. Rules to prevent fires."

Presidential Decree n.689, 26th May 1959.
"Indication of companies and operations subject to controls by the Firefighters Command in order to prevent fires."

Ministerial Decree 16th February 1982.
"Changes to Ministerial Decree 27th September 1965, dealing with companies subject to controls to prevent fires."

Decree n.246, 16th May 1987.
"Rules for fire prevention in civilian buildings."

INSTALLATION RULES FOR THE ELECTRIC SYSTEM'S SAFETY.

Law n. 186, 1st March 1968.
"Rules for producing and installing electrical and electronic systems, materials, and machines."

Italian Electro-technical Committee Rule 64-8.
Electric systems operating at a nominal tension non above 1000 V A/C and 1500 V D/C

2.1 TRANSPORT

The machine can be transported via truck, ship, train, and plane.
The machine is usually shipped wrapped in nylon, and the suction engine is dismantled.
All accessories are shipped separately.

2.2 LIFTING AND HANDLING

The machine can be lifted with a crane or freight elevator, using two hooked, clasped tows at least 1 meter long, or with a fork lift.

If lifted with a crane or freight elevator:
Place the hook end of the tows on top, and in the eyebolt in the lower part (fig. 6), placed in the plates welded on the exchanger.

WARNING!
Lifting the machine with shorter tows can damage its upper parts.

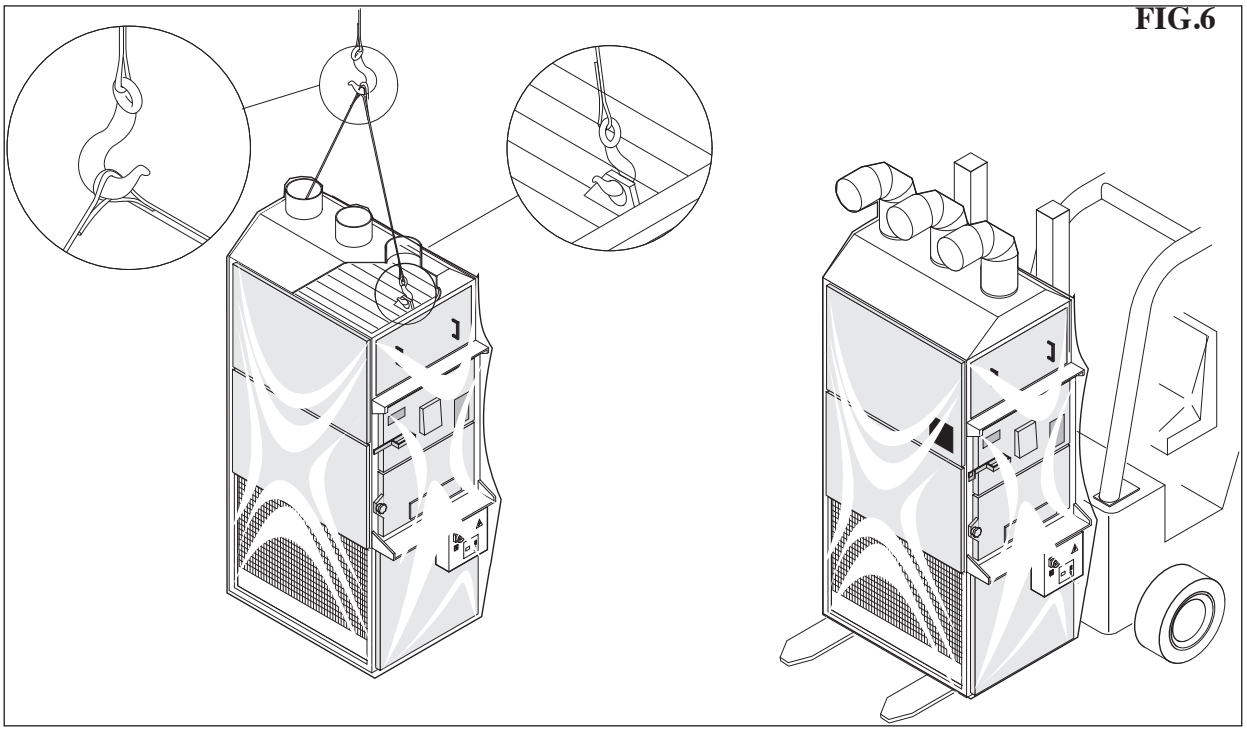

2.3 ENVIRONMENTAL SPECIFICATIONS

While positioning the machine, keep in mind that its functioning is guaranteed under an ambient temperature between 5°C and 40°C, and relative humidity between 35% and 75%

2.5 INSTALLATION

- Package
Do not throw the package in the trash, instead separate the various components according to materials (cardboard, wood, steel, polyester, and so on) and dispose of them according to your Country's laws

The machine needs a solid support on the floor.
Position the machine according to its designated space.
Install the warm air diffusion vents (pos. 2 fig.7a-7b-7c).

IF THE MACHINE HAS THE FUMES VENT:
Install the fumes aspiration system (pos.4 fig.7a-7b-7c).

Install the various tracts of the warm air generator's flue (pos.4, 5, 6 fig.7a-7b-7c).

WARNING!
You must install at least one special pipe T-shaped element in the flue (pos.7 fig.7a-7b-7c), which helps in cleaning operations.

MODELS F85 WITH FUMES VENT **FIG.7a**

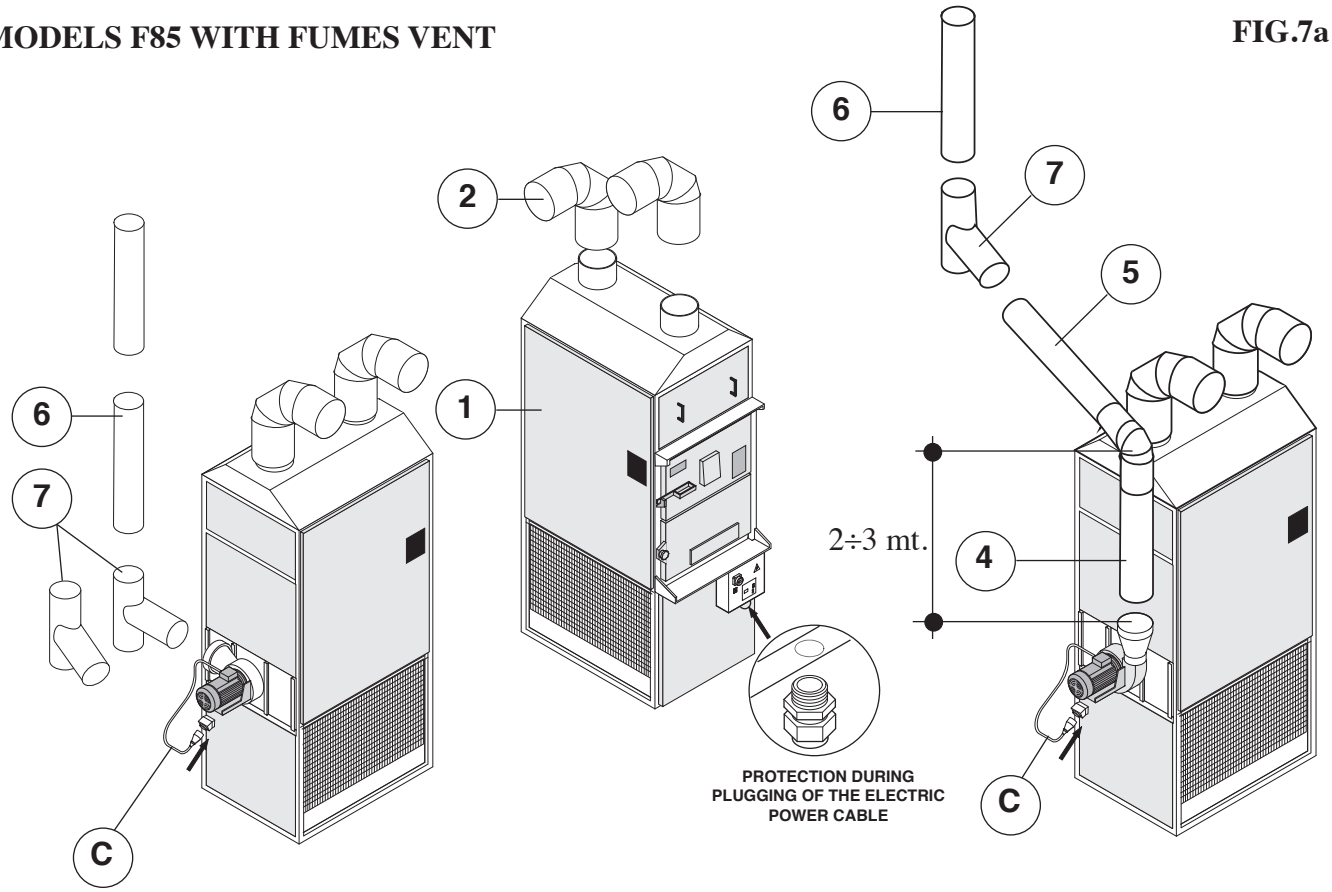

MODELS F85 WITHOUT FUMES VENT

FIG.7b

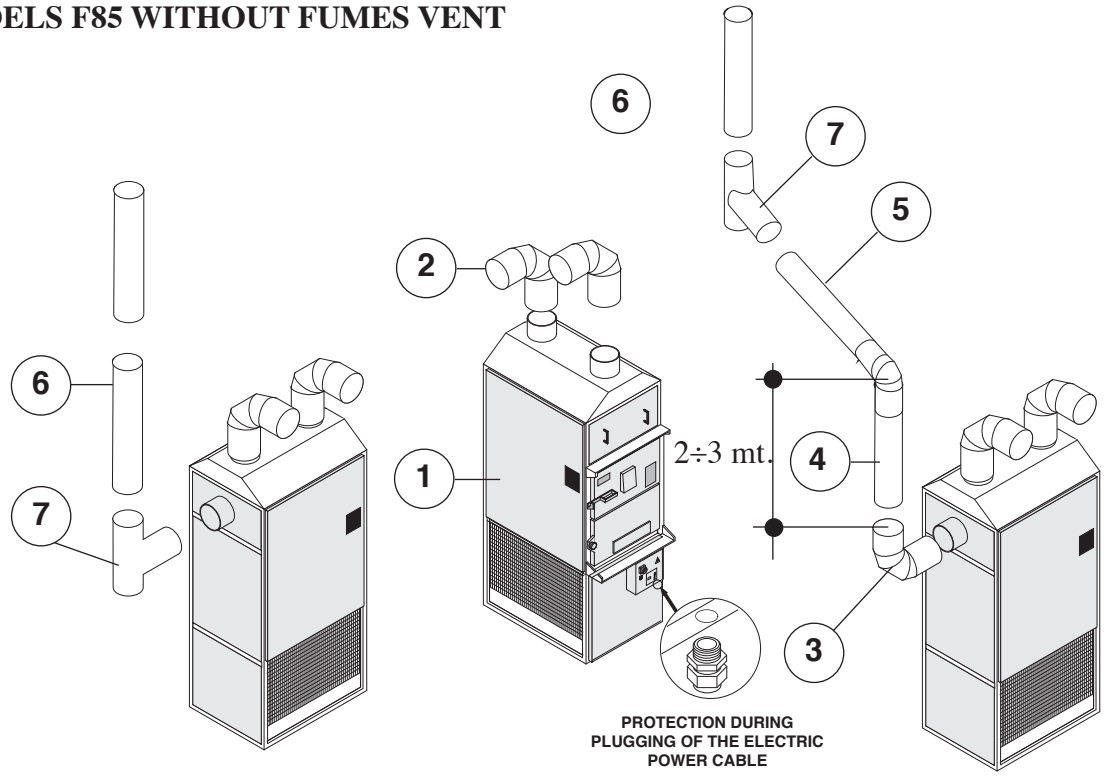

WARNING!
The initial vertical section of the flue should never measure more than 2 or 3 meters in length (pos. 5 fig.7a-7b-7c) before applying the T-shaped tract (pos.7 fig.7a-7b-7c).

MODELS
F120
F240

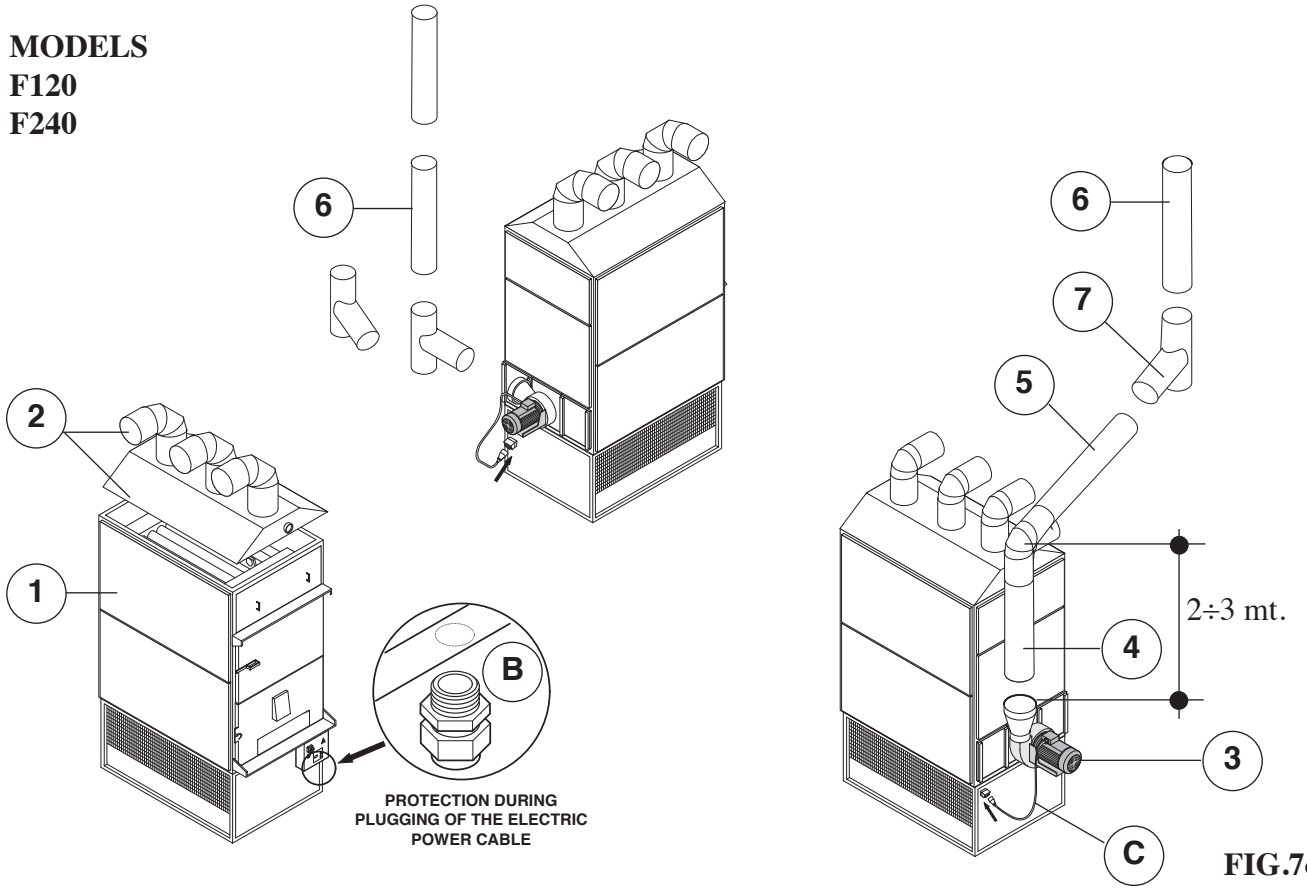

FIG.7c

FIG.8

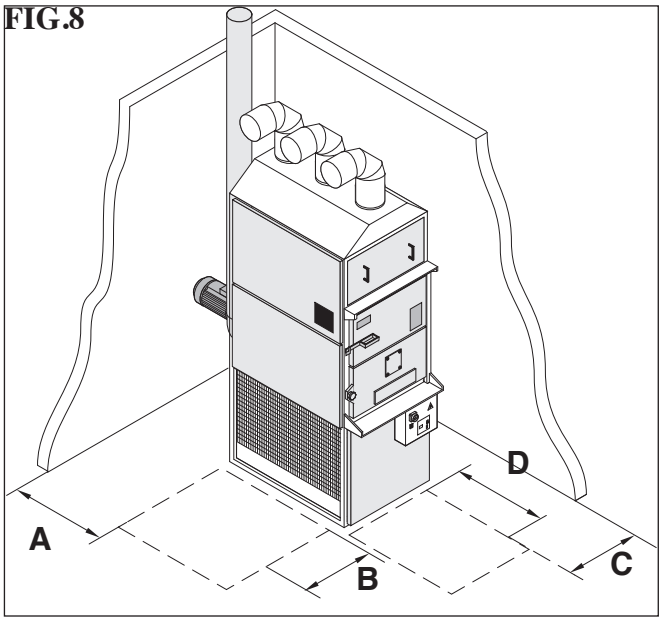

	A	B	C	D
F28	1000	600	600	1500
F55	1000	600	600	1500
F85	1000	600	600	1500
F120	1200	600	600	1800
F240	1200	600	600	1800
F350	1200	600	600	2000

The values in the table are expressed in mm.

2.6 MAINTENANCE SPACE

During installation of the machine, it is advisable to set up an area for later maintenance operations, as indicated in fig. 8.

IMPORTANT: the values in the tables are the recommended minimum values.

2.7 ELECTRIC PLUG-IN

WARNING!
Before plugging in, make sure you have a proper grounding system which follows the current European Laws (EN).
Check the compatibility of the network voltage with the specificatins in the appropriate label in the machine (fig. 2).
Power fluctuations greater than ±10% of the nominal voltage indicated in the label can cause serious damage on the machine. That damage in not covered by the warranty.

IMPORTANT: verify that the power cable is the right size.

Turn the switch on the 0 position in the F85 CV-F120-F240 models (pos. A fig.11), in the F85 (pos. A fig.11B).
Insert the machine's power cable through the gland under the power grid (pos. B fig.7). Connect wires in the terminal by following the attached electric plan (TAV. 2) and following.

IF THE MACHINE HAS THE FUMES VENT:

Plug the fumes suction grid's cable (pos. C fig.7).

Once the cable has been plugged, the suction vents' orientation should be checked.

Proceed as follows:
- Turn on the general;
- Press the “FAN” button to start up the vents (fig.9);
- Make sure the vents’ orientation in correct (refer to the arrows on the fans)

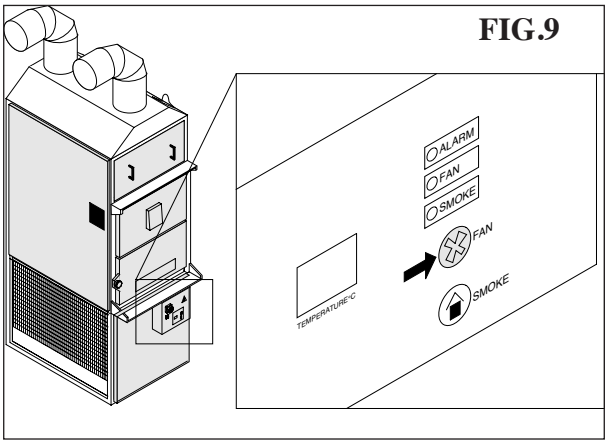

FIG.9

WARNING!
Should this checkup be skipped, the combustion chamber could be damaged during the first startup, due to overheating of the entire machine.

3 OPERATION

3.1 PRELIMINARY CONTROLS

WARNING! Before starting up the machine make sure that:
The power grid's general switch is turned off (pos. OFF).
The machine's general switch is turned on 0 (pos.1 fig. 11).
All installation and assembling has been performed correctly, especially during orientation of the vents.

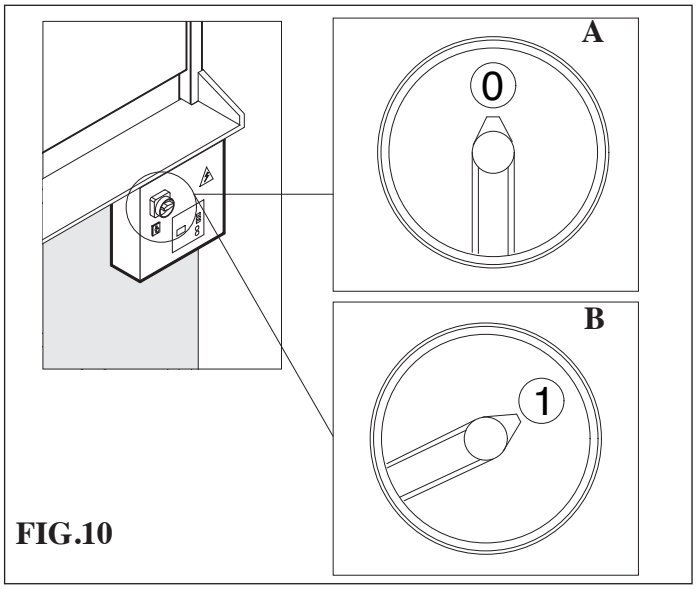

FIG.10

3.1.2 CONTROLS IN THE ELECTRONIC PANEL

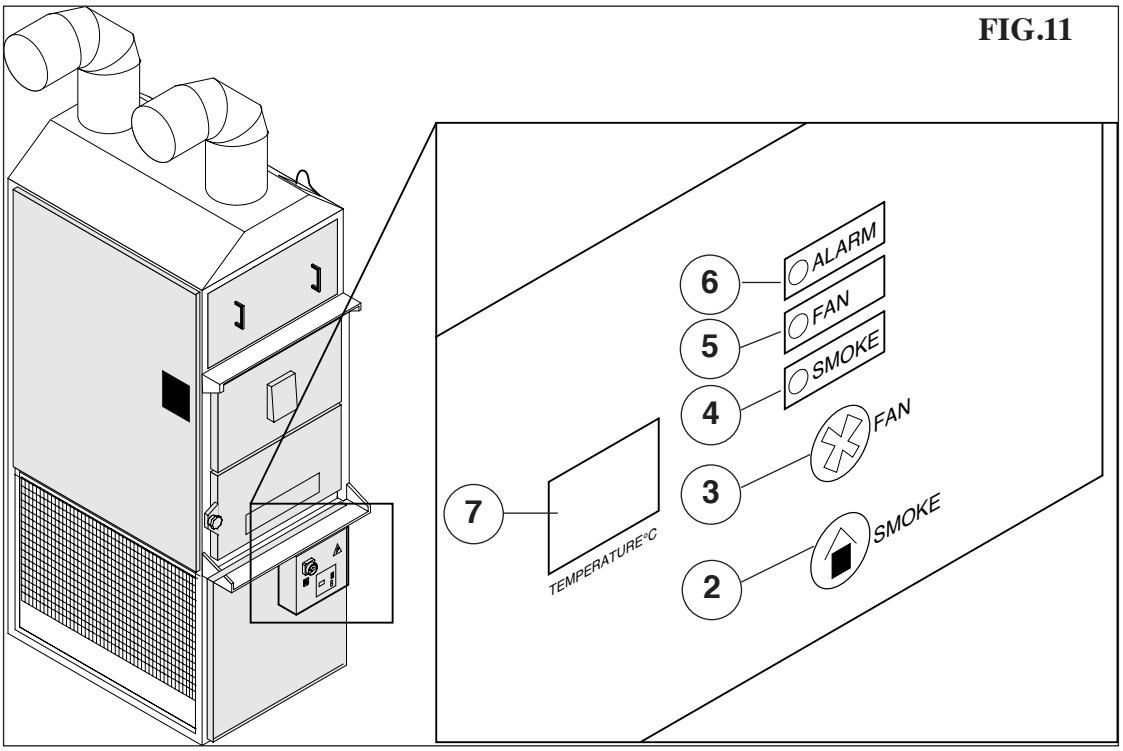

FIG.11

2) fumes vent button.
3) air vent button.
4) fumes vent light (green).
5) air vent light (green).
6) alarm light (red).
7) temperature display.

3.2 STARTUP

Turn on the machine's general switch (pos.B fig.11).
Load the fuel using the grid in the machine's upper part.
Turn on fuel loading and wait for combustion to start up.

WARNING!
Do not use liquid fuel.

WARNING!
If the machine has got a fumes vent, do not turn it off during combustion.

To adjust combustion, regulate suction power in the lower door (pos.3 in fig.12).
When temperature reaches 45°C, the air vents will activate automatically (pos.5 in fig.11), and they will automatically switch off as well when temperature drops below 41°C.
The alarm's thermostat is already set to activate at 90°C.

FIG.12

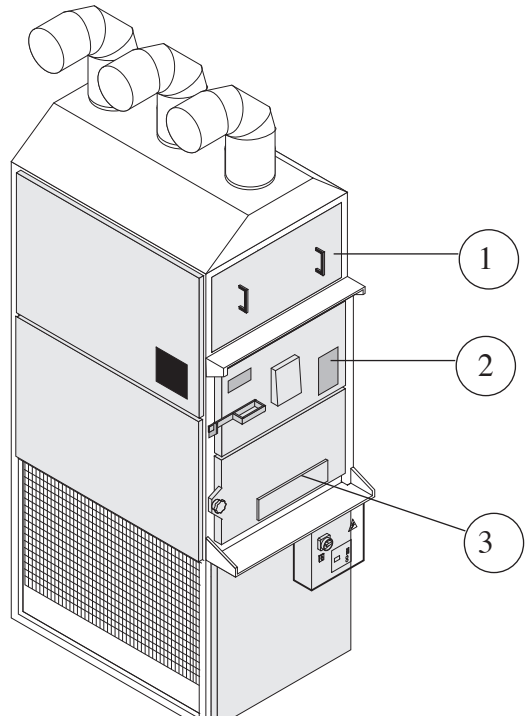

3.2 STARTUP (summer)

IMPORTANT: to turn on cold air circulation, press the fumes vent button (pos.3 fig.16) in absence of combustion.

3.3 OPERATION

The machine must only be loaded with fuel via the upper door (pos. 1 in fig.13). Fuel examples include:

- Dry wood not treated with chemicals.
- Wood chippings pressed in bundles.

WARNING! Do not use powdered wood, nor liquid fuel, during startup and combustion.

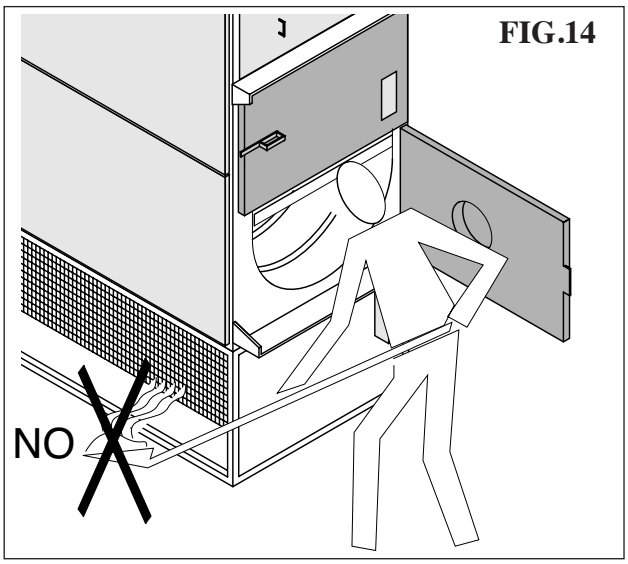

FIG.14

Removing ashes.
Remove ashes only after combustion has ceased, and only after temperature has dropped below 40°C, then:
- open up the two front doors (pos. 1 and 2 in fig.13).

IMPORTANT: the lower door will not open if the upper door is open.
The lower door is closed with a knobbed screw.

- Empty the cinerary.
- Close the doors.

IMPORTANT: do not place the ashes near the vents' suction area (fig. 17).

WARNING! Do not overload the machine. An excessive heat generated by combustion could deform the machine's structure.
When the warm air generator is on, there is a chance that the alarm will be set off. This is due to the excessive heat generated by the furnace. In this case, lower the heat generation by shutting down the air suction (pos. 3 in fig. 13), and stop loading fuel.

WARNING! Do not let the alarm activated for more than 2 minutes, or the wirings could be damaged.

3.4 REGULAR STOP

You can turn off the furnace by shutting down the air suction (pos. 3 in fig. 13)
Then, after the machine has cooled down, switch off the flue's suction and the vents (pos. 0 in fig. 11), and finally turn off the machine's general switch.

WARNING!
Do not turn off the general switch before combustion has ceased and the ashes are cold.

4 ORDINARY MAINTENANCE

FIG.15

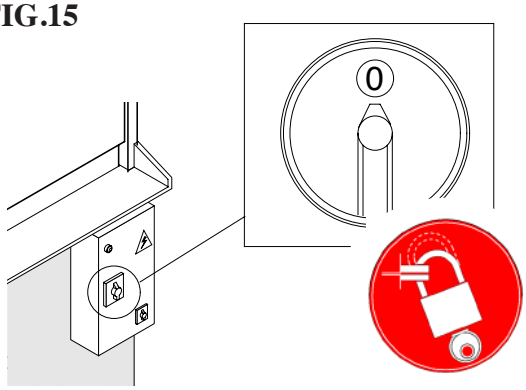

4.1 PRELIMINARY CONTROLS

WARNING! Before maintenance, make sure that:
- **The power grid's general switch is turned off (pos. OFF).**
- **The machine's general switch in on 0 (Fig. 18), that a padlock is placed on the appropriate lock, and its keys given to the safety operator.**
- **Make sure the machine is not powered during maintenance operations.**

4.2 CLEANING THE WARM AIR GENERATOR

IMPORTANT: at season's end, clean the combustion chamber, the flue, and the heat exchanger's pipes.

FIG.16

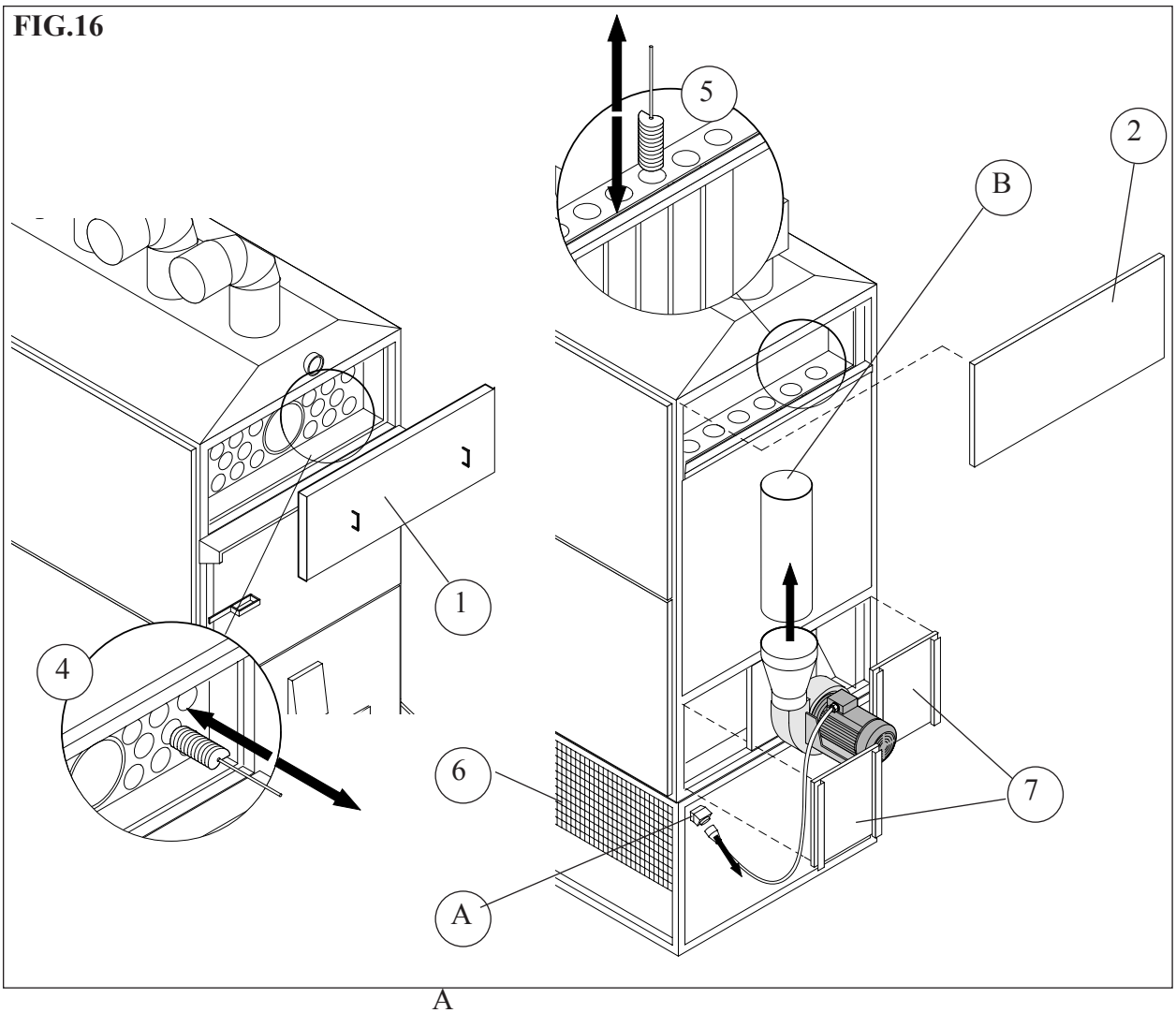

A

4.2.1 WIPING OFF THE ASH

Every time the machine is stopped, the ash on the bottom of the combustion chamber must be removed

4.2.2 CLEANING THE FLUE

To proceed with cleaning you must:
- Unplug suction (pos. A in fig.16).
- Unplug the flue from the suction (pos. B in fig.16).
- Remove soot from the flue with an iron brush.
- Reassemble flue with suction.
- Plug suction.

4.2.3 CLEANING THE HEAT EXCHANGER

To proceed with cleaning you must:
- remove back protection panel (1 in fig.16) by unscrewing it.
- unplug suction (pos. A in fig. 16).
- remove the rest of the back protection panels by unscrewing them (pos.2, 7 fig. 16).
- clean the exchanger's pipes with a helix-shaped iron brush, from the front of the machine (pos. 4 in fig. 6).
- do the same for the descending vertical pipes (pos.5 fig.16).
- install back the protection panels (part. 1,2 and 7 fig.16).
- plug suction (pos.A fig.16).
- plug flue with suction.

NOTE: Similar operations must to be carried out for the boilers that are not equipped with smoke extraction fan.

4.3 FANBELT STRETCHING (models F120-F240 only)

You should periodically stretch the fan belts.
To access the fan belts, remove the protection grids (part. 6 fig.16).
- Regulate the fan belts' stretching with the registry screw (fig.17).
- In case this doesn't work, replace the belt.
- At operations complete, replace the protection grid.

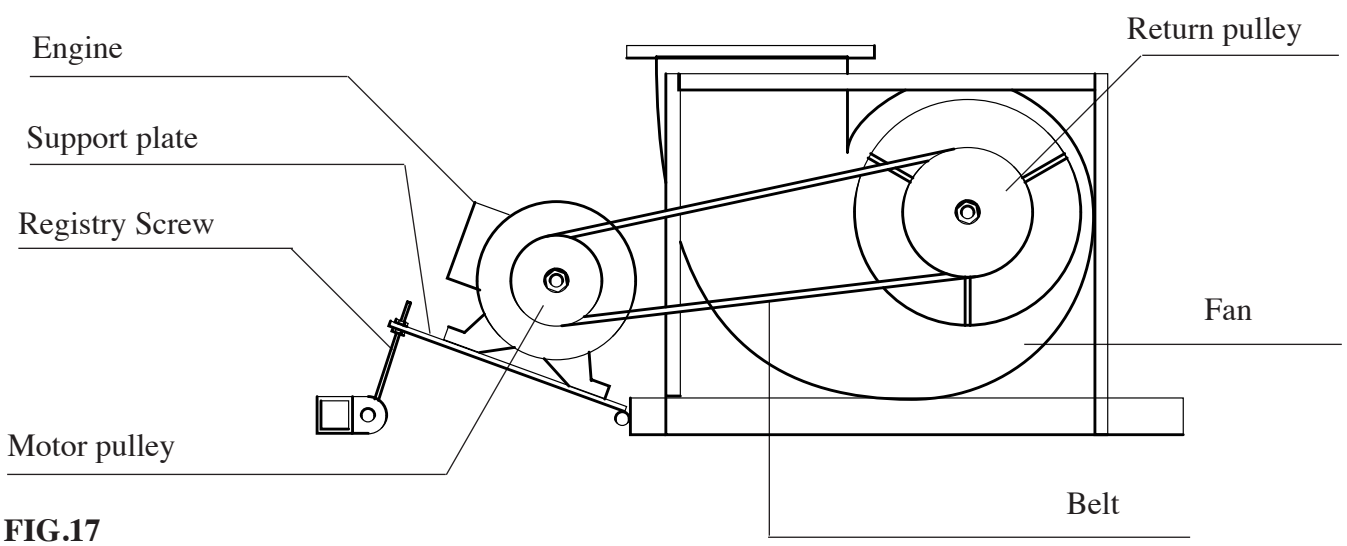

FIG.17

4.4 REPLACING THE THERMOSTAT PROBE (model F85 SV only)

To replace the thermostat probe:
- unscrew the probe holder (pos.A fig.18);
- remove the probe holder and remove the central screw (pos.B fig.18) in the probe's lodge;
- unplug the probe's lodge by unscrewing it (pos.C and pos.D fig.18);
- replace the probe and reverse the above operations.

Fig.18

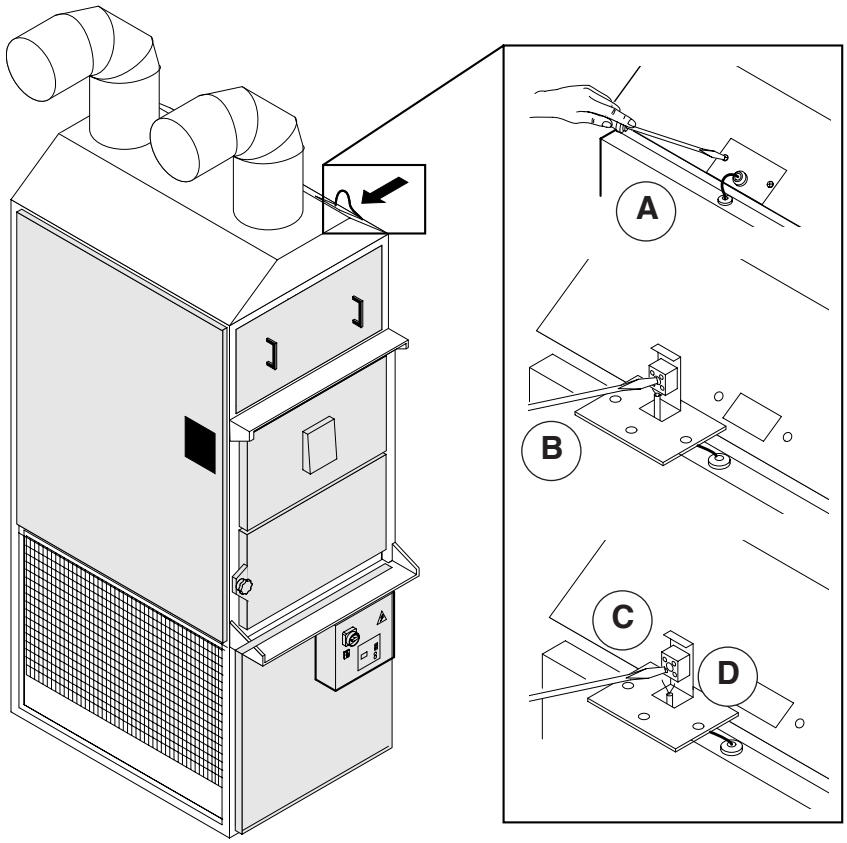

4.5 REPLACING THE FUSE

The fuse lies inside the electronic panel. To replace it, consult the electric plans (tav.2-tav.3).

5 END OF SERVICE

When the machine's lifetime is up, you should:
- remove all rubber parts (O-ring, gaskets, girds, etc...).
- remove all recyclable plastic components (thermoplastic parts) and separate them from the unrecyclable ones (thermo-resistant parts).
- remove all copper parts (cables).
Dispose of the different materials according to your Country's laws.

6 ACOUSTIC POLLUTION

The sound emission levels for the models F 85 F120 and F240 have been tested according to the ISO 11202 rules, and the following maximum sound thresholds have been recorded:

	L_{pA} (dB(A))		
MODEL	**F85**	**F 120**	**F 240**
Machine with only fumes vent turned on	< 60	< 60	< 60
Machine with only warm air vent	66,6	70,6	73,4
Machine with both vents turned on	66,7	70,9	74,1

L_{pA}: Max sound pressure level recorded on the operator's work station

7 SPARE PARTS CATALOGUE

HOW TO ORDER SPARE PARTS

To order spare parts, the following specifications must be presented:
- Machine type (model, serial number, year of manufacturing.
- Spare part description.
- Quantity needed.
- Any indications the spare part might have engraved on a plate.

N°	DESCRIZIONE	N°	DESCRIPTION	N°	BEZEICHNUNG
1	SONDA TEMPERATURA ARIA	1	AIR TEMPERATURE SENSOR	1	TEMPERATURFÜHLER
2	QUADRO ELETTRICO	2	ELECTRIC CONTROL PANEL	2	SCHALTTAFEL
3	GRIGLIA DI APPOGGIO SCARTI	3	REJECTED MATERIAL SUPPORT GRILLE	3	GITTER ABFALLABLAGE
4	SPORTELLO DI CONTROLLO ESTRAZIONE CENERI	4	ASH EXTRACTION CONTROL PANEL	4	KONTROLLTÜR ASCHEENTNAHME
5	SPORTELLO CARICAMENTO MANUALE	5	MANUAL LOADING PANEL	5	TÜR ZUM MANUELLEN BELADEN
6	SPORTELLO PULIZIA TUBI	6	PIPE CLEANING PANEL	6	TÜR ZUR ROHRREINIGUNG
7	BOCCHE DI MANDATA ARIA CALDA	7	HOT AIR OUTLET OPENINGS	7	ZULUFTSTUTZENWARMELUFT
8	GRATA DI ASPIRAZIONE	8	SUCTION GRATING	8	SAUGGITTER
9	GRUPPO DI ASPIRAZIONE ARIA	9	AIR SUCTION ASSEMBLY	9	BAUGRUPPELUFTANSAUGUNG
10	GRUPPO DI ASPIRAZIONE FUMI E SPORTELLO PER CENERE	10	SMOKE SUCTION ASSEMBLY AND ASH PANEL	10	BAUGRUPPE DAMPFABSAUGUNG UND ASCHETÜR

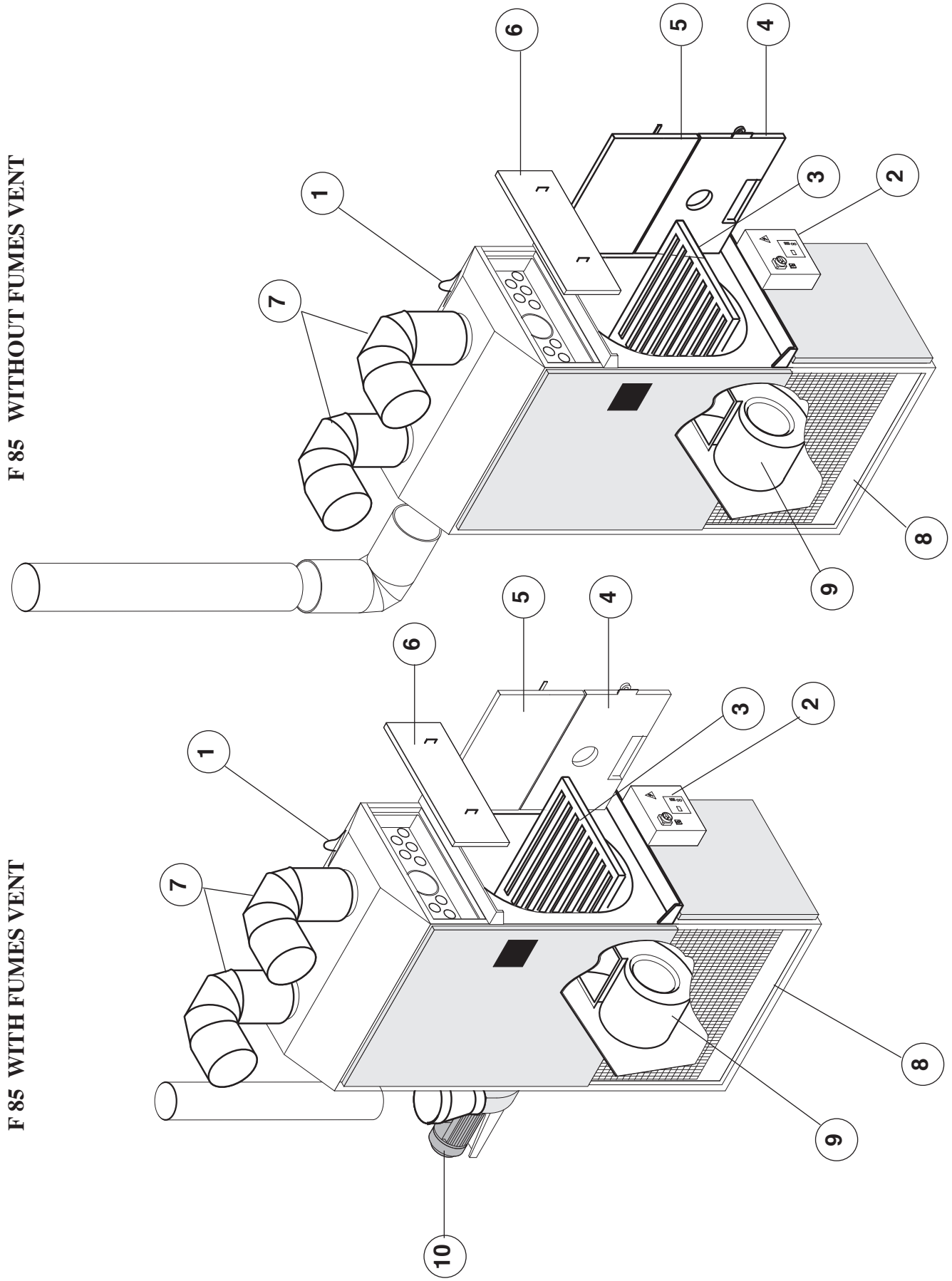

TAV.1	SPARE PARTS F85

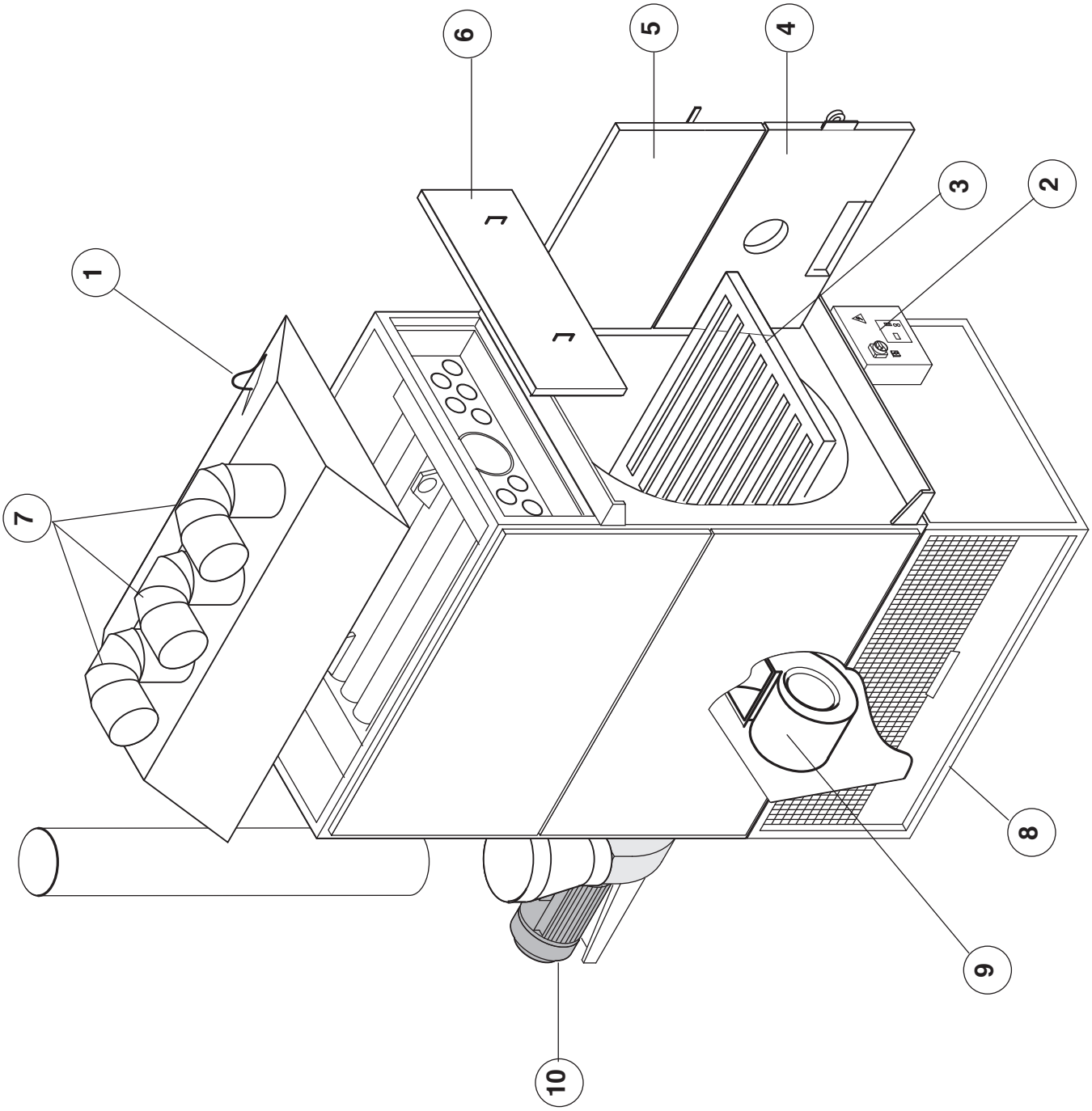
1
2
3
4
5
6
7
7
7
8
9
10

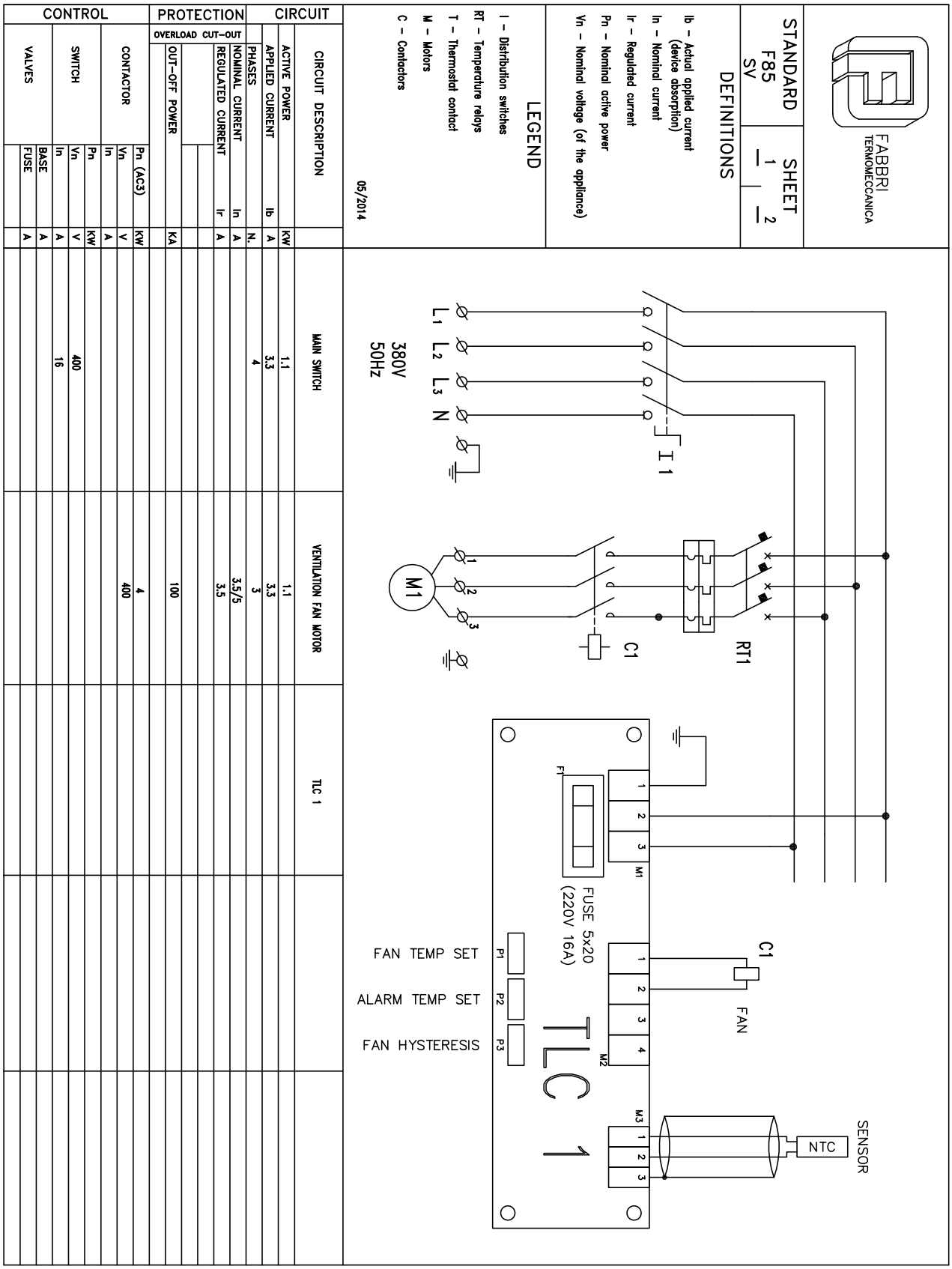

TAV.3 | **ELECTRIC PLAN F85-1 WITHOUT FUMES VENT**

FABBRI
TERMOMECCANICA

STANDARD
F85
SV

SHEET 2 / 2

DEFINITIONS

Ib – Actual applied current (device absorption)
In – Nominal current
Ir – Regulated current
Pn – Nominal active power
Vn – Nominal voltage (of the appliance)

LEGEND

I – Distribution switches
RT – Temperature relays
T – Thermostat contact
M – Motors
C – Contactors

05/2014

NOTE

– The thermostats marked (T), with contacts indicated by varius numbers, sither refer to one thermostat with several different intervention thresholds or to individual thermostats (one for each number).

– The control panel face plate dimensions indicated are intended as a guideline only.

– The protection calss of the control panel and the corresponding connections yo individual pieces of furnace equipment must be at least IP 44

– The main switch handles interlock with the cover. The control panel may only be opened when the switch is in the open position.

N.B.

– During installation, the Purchaser must protect the hot air generator from "Indirect Contact", in compliance with current CEI standards. We recommende the use of a diff. switch with a 30 mA cut-off threshold, which will protect the main power supply line.

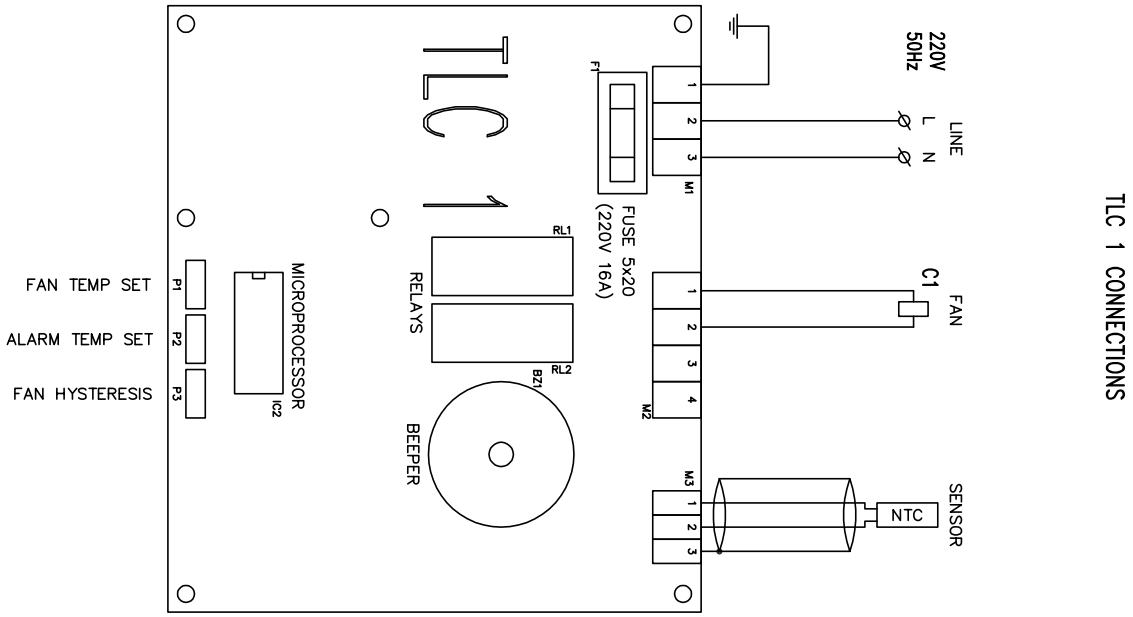

TAV.4	ELECTRIC PLAN F85-2 WITHOUT FUMES VENT

FABBRI
TERMOMECCANICA

TIPICO	FOGLIO
F85 con Ventola	1 2

DEFINIZIONI

Ib – Corrente di impiego effetiva (assorbimento utenza)
In – Corrente nominale
Ir – Corrente regolata
Pn – Potenza attiva nominale
Vn – Tensione nominale (dell'apparecchio)

LEGENDA

I – Interruttori di manovra
RT – Relè termici
T – Contatto termostati
M – Motori
C – Contattori

05/2014

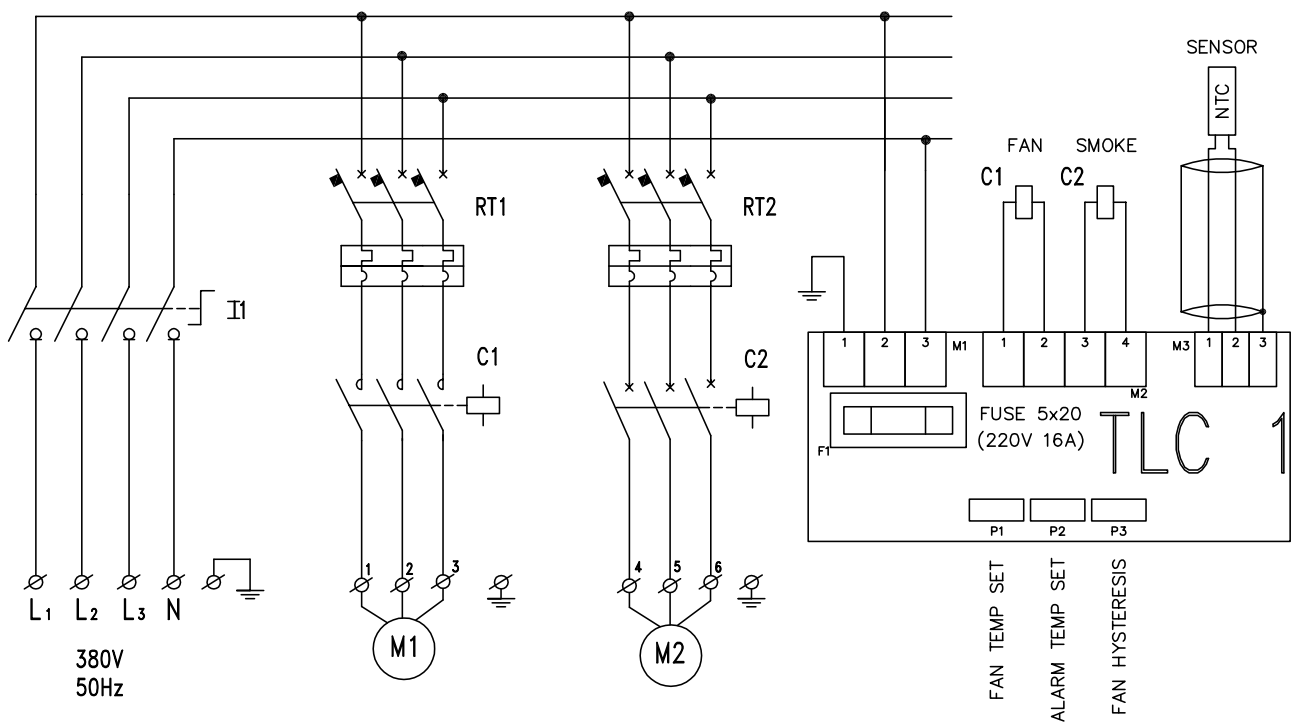

				INT. GENERALE	MOTORE VENTOLA ARIA	MOTORE VENTOLA FUMI	TLC 1	
CIRCUITO	DESCRIZIONE CIRCUITO							
	POTENZA ATTIVA		KW	1.4	1.1	0.250		
	CORRENTE DI IMPIEGO	Ib	A	4.2	3.3	0.9		
	FASI		N.	4	3	3		
PROTEZIONE SALVAMOTORE	CORRENTE NOMINALE	In	A		3,5/5	0,7/1		
	CORRENTE REGOLATA	Ir	A		3.5	0.95		
	POTERE DI INTERRUZIONE		KA		100	100		
COMANDO	CONTATTORE	Pn (AC3)	KW	4	4	4		
		Vn	V	400	400	400		
		In	A					
	INTERRUTTORE	Pn	KW					
		Vn	V					
		In	A					
	VALVOLE	BASE	A					
		FUSIBILE	A					

ELECTRIC PLAN F85-1 WITH FUMES VENT

TAV.5

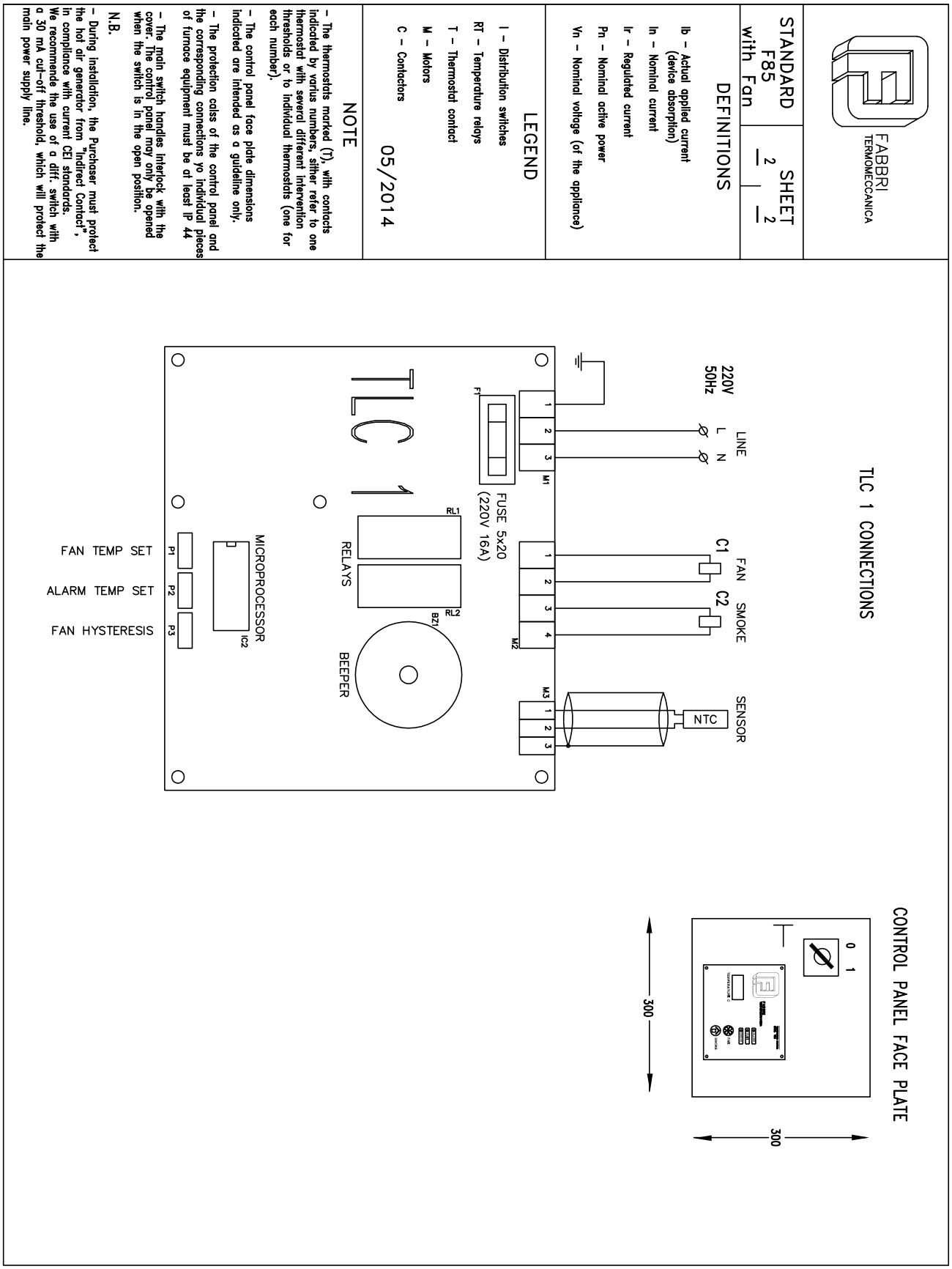

TAV.6	ELECTRIC PLAN F85-2 WITH FUMES VENT

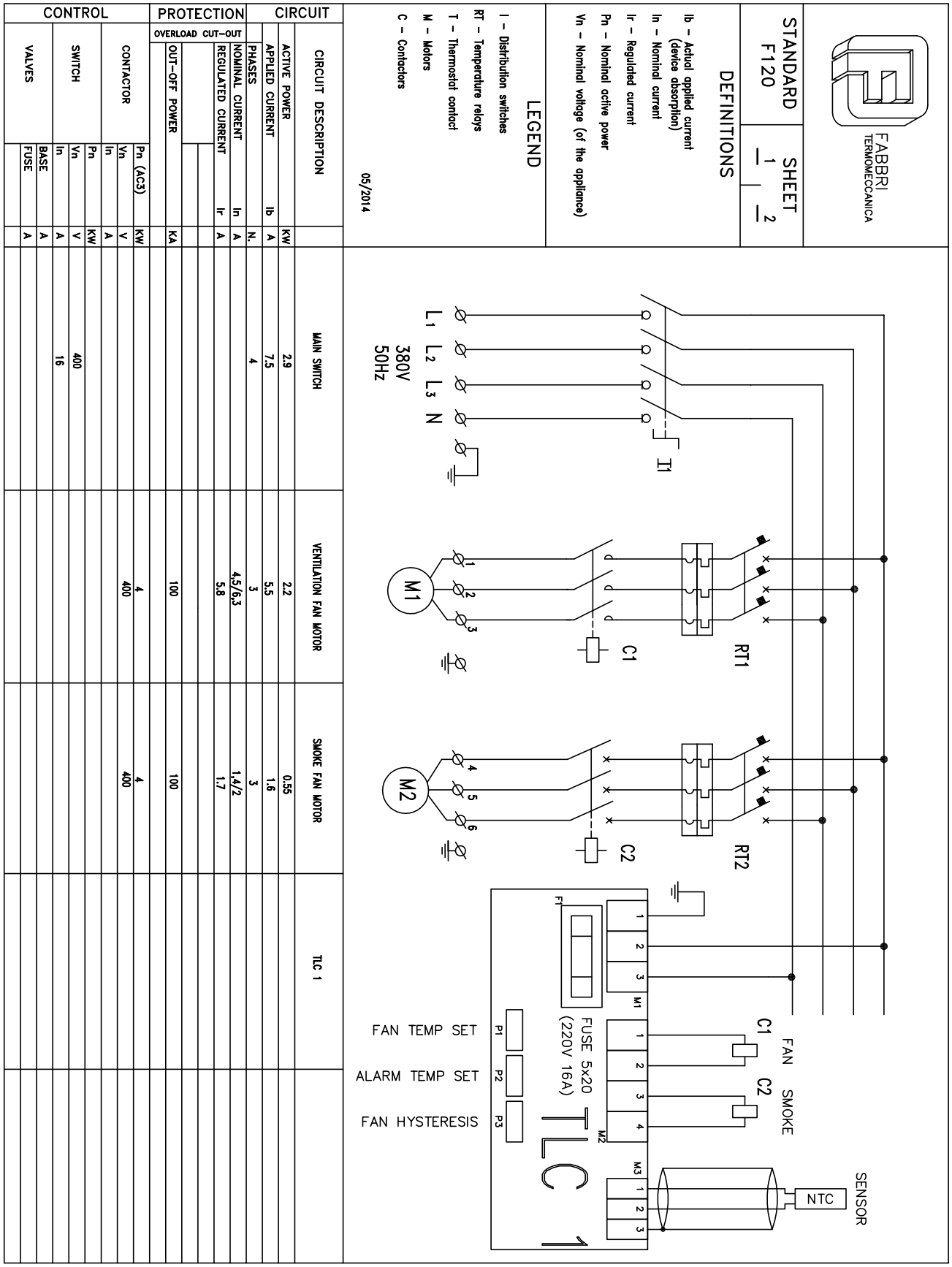

CIRCUIT DESCRIPTION		MAIN SWITCH	VENTILATION FAN MOTOR	SMOKE FAN MOTOR	TLC 1	
ACTIVE POWER	KW	2.9	2.2	0.55		
APPLIED CURRENT	A	7.5	5.5	1.6		
PHASES	N.	4	3	3		
NOMINAL CURRENT	A		4,5/6,3	1,4/2		
REGULATED CURRENT	A		5.8	1,7		
OUT-OFF POWER	KA		100	100		
CONTACTOR Pn (AC3)	KW		4	4		
CONTACTOR Vn	V		400	400		
CONTACTOR In	A					
SWITCH Pn	KW					
SWITCH Vn	V	400				
SWITCH In	A	16				
VALVES BASE	A					
VALVES FUSE	A					

FABBRI
TERMOMECCANICA

STANDARD F120	SHEET 2 / 2

DEFINITIONS

Ib – Actual applied current (device absorption)

In – Nominal current

Ir – Regulated current

Pn – Nominal active power

Vn – Nominal voltage (of the appliance)

LEGEND

I – Distribution switches

RT – Temperature relays

T – Thermostat contact

M – Motors

C – Contactors

05/2014

NOTE

– The thermostats marked (T), with contacts indicated by varius numbers, sither refer to one thermostat with several different intervention thresholds or to individual thermostats (one for each number).

– The control panel face plate dimensions indicated are intended as a guideline only.

– The protection calss of the control panel and the corresponding connections yo individual pieces of furnace equipment must be at least IP 44

– The main switch handles interlock with the cover. The control panel may only be opened when the switch is in the open position.

N.B.

– During installation, the Purchaser must protect the hot air generator from "Indirect Contact", in compliance with current CEI standards.
We recommende the use of a diff. switch with a 30 mA cut-off threshold, which will protect the main power supply line.

TLC 1 CONNECTIONS

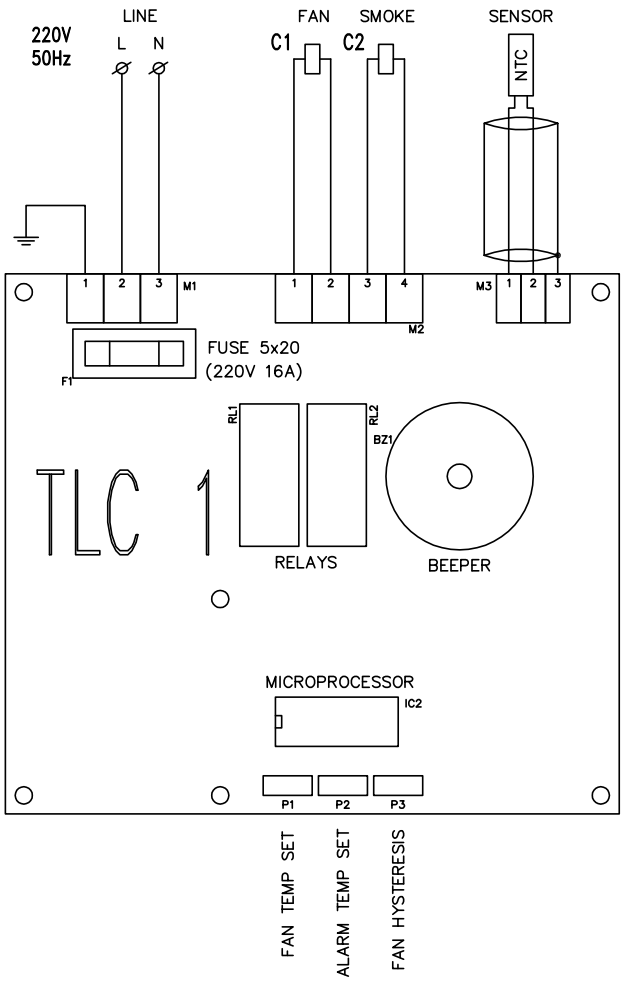

CONTROL PANEL FACE PLATE

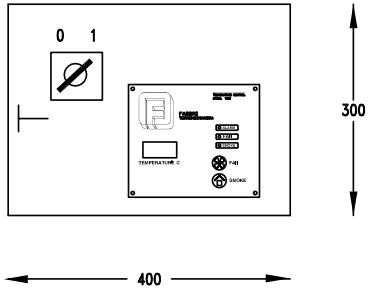

ELECTRIC PLAN F120-2

TAV.8

FABBRI
TERMOMECCANICA

STANDARD F240	SHEET 1 / 2

DEFINITIONS

Ib – Actual applied current (device absorption)

In – Nominal current

Ir – Regulated current

Pn – Nominal active power

Vn – Nominal voltage (of the appliance)

LEGEND

I – Distribution switches

RT – Temperature relays

T – Thermostat contact

M – Motors

C – Contactors

05/2014

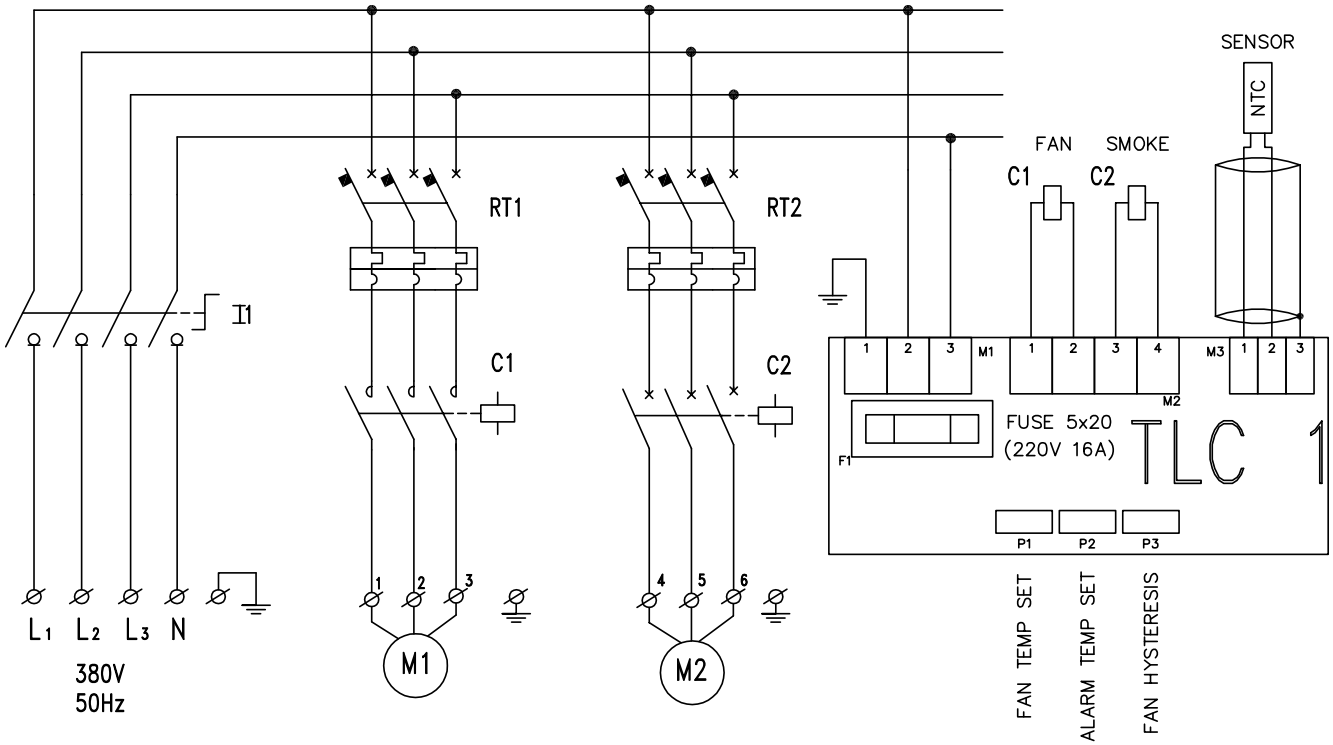

	CIRCUIT DESCRIPTION			MAIN SWITCH	VENTILATION FAN MOTOR	SMOKE FAN MOTOR	TLC 1	
CIRCUIT	ACTIVE POWER		KW	3.65	3	0.55		
CIRCUIT	APPLIED CURRENT	Ib	A	9.2	7.2	1.6		
PROTECTION – OVERLOAD CUT-OUT	PHASES		N.	4	3	3		
PROTECTION – OVERLOAD CUT-OUT	NOMINAL CURRENT	In	A		5,5/8	1,4/2		
PROTECTION – OVERLOAD CUT-OUT	REGULATED CURRENT	Ir	A		7.6	1.7		
PROTECTION – OVERLOAD CUT-OUT								
PROTECTION – OVERLOAD CUT-OUT								
PROTECTION – OVERLOAD CUT-OUT	OUT-OFF POWER		KA		50	100		
PROTECTION – OVERLOAD CUT-OUT								
CONTROL	CONTACTOR	Pn (AC3)	KW		4	4		
CONTROL	CONTACTOR	Vn	V		400	400		
CONTROL	CONTACTOR	In	A					
CONTROL	SWITCH	Pn	KW					
CONTROL	SWITCH	Vn	V	400				
CONTROL	SWITCH	In	A	16				
CONTROL	VALVES	BASE	A					
CONTROL	VALVES	FUSE	A					
CONTROL								

ELECTRIC PLAN F240-1

TAV.9

FABBRI
TERMOMECCANICA

STANDARD	SHEET	
F240	2	2

DEFINITIONS

Ib – Actual applied current (device absorption)

In – Nominal current

Ir – Regulated current

Pn – Nominal active power

Vn – Nominal voltage (of the appliance)

LEGEND

I – Distribution switches

RT – Temperature relays

T – Thermostat contact

M – Motors

C – Contactors

05/2014

NOTE

– The thermostats marked (T), with contacts indicated by varius numbers, sither refer to one thermostat with several different intervention thresholds or to individual thermostats (one for each number).

– The control panel face plate dimensions indicated are intended as a guideline only.

– The protection calss of the control panel and the corresponding connections yo individual pieces of furnace equipment must be at least IP 44

– The main switch handles interlock with the cover. The control panel may only be opened when the switch is in the open position.

N.B.

– During installation, the Purchaser must protect the hot air generator from "Indirect Contact", in compliance with current CEI standards.
We recommende the use of a diff. switch with a 30 mA cut-off threshold, which will protect the main power supply line.

TLC 1 CONNECTIONS

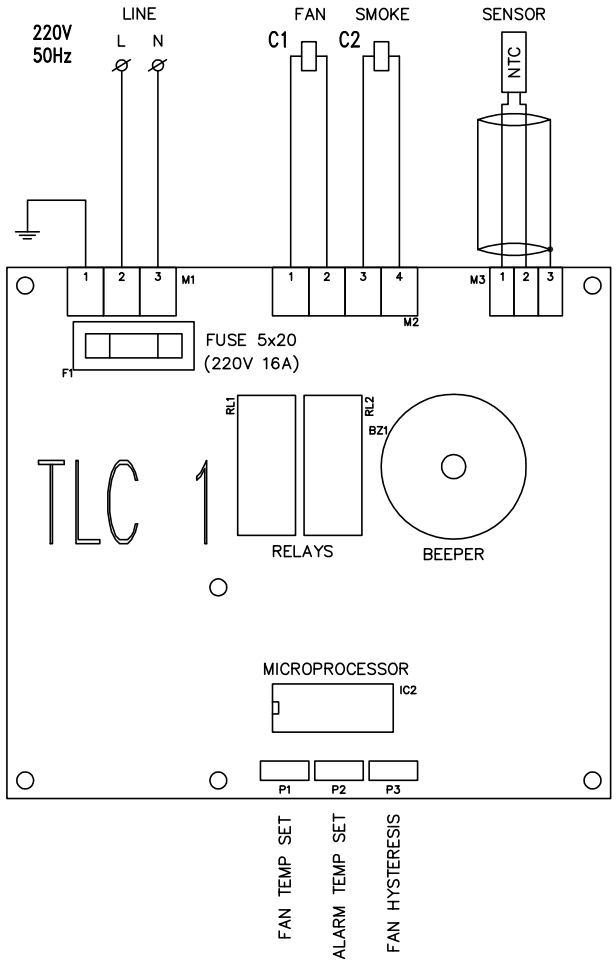

CONTROL PANEL FACE PLATE

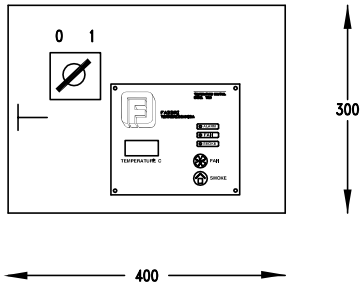

ELECTRIC PLAN F240-2

TAV.10